Measuring video quality objectively using a single-ended method

Rohde & Schwarz makes it possible: With a new method, the picture quality of H.264- or MPEG-2-coded videos in SDTV and HDTV resolution can be monitored and recorded in realtime at any point during the digital transmission chain.

Quality of service

Program providers as well as operators of broadcasting networks and playout centers must objectively monitor and assess the quality of the picture presented to viewers (quality of service). This is necessary so that quality problems can be corrected quickly during live video streams, and also in order to obtain reliable quality data provided during a specific time interval.

PSNR – an objective measurement value

Ever since the start of digital TV, the peak signal-to-noise ratio (PSNR) value has been firmly established as an objective and verifiable method for assessing the coding quality of compressed videos. This value is a measure of the differences between the original picture and the compressed picture; calculating this value had always required the availability of the uncoded, original material. This is why the calculation had to take place in realtime directly on the video encoder, where every pixel of the original was compared against every pixel of the compressed video – hence its designation as a double-ended process.

qPSNR analysis at every point in the transmission chain

The new quasi PSNR (qPSNR) analysis from Rohde & Schwarz, on the other hand, can monitor and record in realtime the picture quality of H.264- or MPEG-2-coded videos in SDTV and HDTV resolution. This single-ended method measures the PSNR value by calculating it extremely accurately using only the coding parameters of the compressed video (FIG 1). The R&S®DVM MPEG-2 monitoring systems use this innovative process to calculate the PSNR values at every point in the digital transmission chain – depending on the optional inputs installed (FIG 2).

FIG 1 There is a high degree of correlation between the PSNR values calculated using the time-consuming double-ended method and the qPSNR values for I frames calculated by the R&S®DVM in realtime from the coding parameters using the single-ended method.

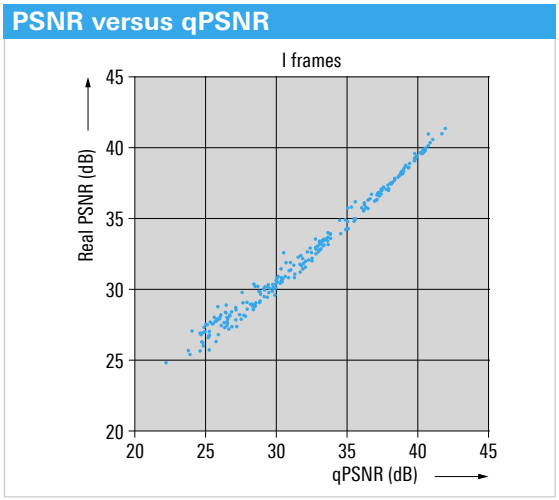

FIG 2 The R&S®DVM can measure the qPSNR value at any point during transmission, whether it is in an IP data stream during signal feed, in a transport stream at the multiplexer, or in the RF signal at the transmitter. The only requirement is that the appropriate optional input be installed.

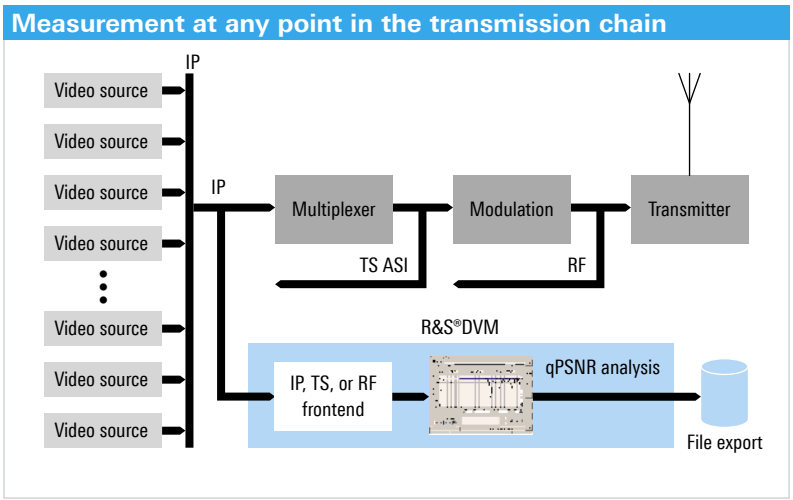

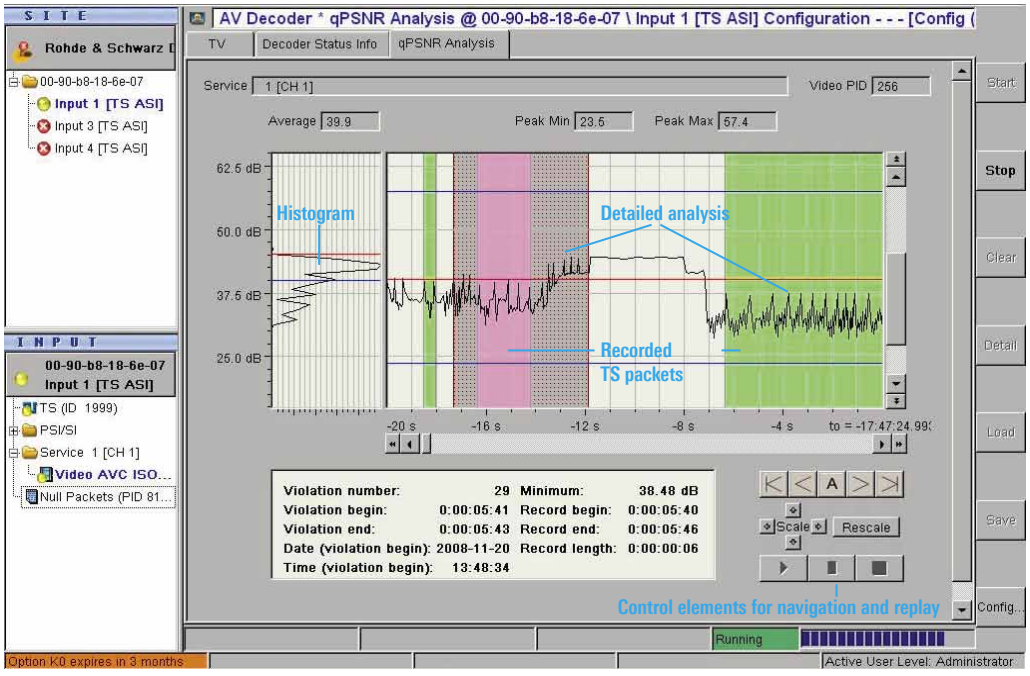

FIG 3 The user interface shows both the time progression as well as the frequency distribution (histogram) of the qPSNR values. Locations at which the transport stream packets are recorded are identified in color. The results of the detailed analysis are integrated into the existing qPSNR graphs. Browsing between the recorded transport stream segments is accomplished quickly to allow detailed analysis or replay.

Detailed analysis – in realtime

The R&S®DVM performs a realtime analysis of the I frames contained in the video stream and displays the progression of the qPSNR values graphically versus time and as a histogram (FIG 3). Extensive zoom and scroll functions provide the user with a continuous overview during measurements. It does not matter which inputs receive the video stream (ASI, IP, or RF), whether H.264 or MPEG-2 coding is involved, or whether the resolution is SDTV or HDTV.

When a definable qPSNR value falls below the permissible limit, the R&S®DVM records the transport stream packets of the monitored video stream on the built-in hard disk. The configurable pretrigger helps ensure that sufficient transport stream data is available for subsequent detailed analysis. The R&S®DVM can also be set to perform a subsequent detailed qPSNR analysis of the recorded segments, including all I, P, and B frames. This makes it possible to calculate the qPSNR value for each individual picture. The results of the detailed analysis are automatically added to the graphic at the appropriate location (FIG 3). All results can be stored and then reloaded into the R&S®DVM for viewing and further analysis. Since the R&S®DVM stores all results transparently in CSV files, other tools can easily be used for subsequent analysis of the qPSNR data.

Display of transport stream segments

All recorded transport stream segments can, of course, be displayed using the R&S®DVM400 transport stream generator option to allow detailed analysis. The R&S®DVM400 hardware decoder option is also available for visual display of the video streams. Finally, the qPSNR option for all instruments in the R&S®DVM family includes a software decoder for subsequent display of SDTV video material, allowing the quality perceived by television viewers to be reproduced at any time.

Christian Zühlcke

The qPSNR analysis is available as a software option for all instruments in the R&S®DVM family, and can also be installed on many instruments already supplied:

R&S®DVM50	model .02 and .03
R&S®DVM100	model .03
R&S®DVM100L	model .02
R&S®DVM400	model .03

Abbreviations

I frame	Intra-coded frame
P frame	Predictive coded frame
B frame	Bi-directional coded frame
CSV	Comma separated values
PSNR	Peak signal-to-noise ratio