R&S®DVM MPEG-2 Monitoring System

New scheduler suite for convenient monitoring of digital TV signals

The R&S®DVM (FIG 2) is a versatile system for monitoring digital TV signals. The R&S®DVM scheduler suite control software, developed specifically for the R&S®DVM, offers a number of convenient enhancements.

Monitoring automatically adapted to transport streams

Digital TV signal monitoring must conform to the specific requirements of each transport stream, such as the limit values for the data rate of the included programs. These parameters are stored together with the remaining settings in the monitoring configuration. For example, if a network operator uses a single channel to transmit different transport streams that vary in regard to programs, data rates, or coding methods depending on the time of day (FIG 1), an automatic switchover to the monitoring configuration that matches the measurement parameter would be convenient.

Users of the R&S®DVM monitoring system from Rohde & Schwarz do not have to develop separate software for this purpose, as the new R&S®DVM scheduler suite can automate this switchover easily. This software always uses the correct monitoring configuration for each transport stream.

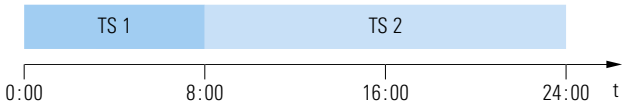

FIG 1 Transmission with varying transport streams (TS).

Powerful: R&S®DVM for monitoring DTV networks

The R&S®DVM brings together in a single device all the functions needed for complete monitoring of DTV networks. It provides real-time monitoring of numerous RF characteristics, of the transport stream structure and its contents. Owing to the high integration density, up to four monitoring units operating in parallel can be accommodated in a single box of only one height unit. Numerous interfaces for the various digital TV standards, including the new DVB-S2 satellite standard, are available. For DVB-H networks, additional monitoring functions specialized for time slicing were developed. All measurements can be configured according to the needs of the user and the characteristics of the network. A hardware decoder makes it possible to check the video contents of SD and HD formats, which are coded in accordance with MPEG-2 or MPEG-4 / AVC/H.264. Software options allow the R&S®DVM to be expanded into a full-featured MPEG analyzer.

Its SNMP interface allows the R&S®DVM to be integrated into network management systems. However, a conventional web browser also permits direct access to the measurement results and the device configuration. The user administration developed specifically for the R&S®DVM controls the access rights for local and network users. This both secures the system against unauthorized access and prevents improper configuration by unauthorized users.

43979/9

FIG 2 The R&S®DVM100L takes up only one height unit, but can monitor up to four signals simultaneously.

The intuitive interface makes configuration of the control program quick and easy (FIG 3). Once the monitoring system is selected, the software automatically finds all available monitoring configurations. These can then be placed in a central table and each assigned line-by-line to individual time periods. The integrated "active period editor" makes it easy to assign time periods clearly and conveniently: The individual measurement steps are assigned to the appropriate monitoring time periods with just a few clicks of the mouse in the graphical assignment display (FIG 4).

Multiple signals – and only one monitoring unit

The R&S®DVM scheduler suite offers an excellent solution whenever sequential testing is sufficient for monitoring multiple signals: Using the scheduler suite, an individual monitoring unit can automatically monitor any number of channels in sequence (FIG 5).

The switchover is done completely autonomously, making manual replugging unnecessary. In the case of an RF or IP transmission, the software simply sets the receiver to a new frequency or port number. In the case of direct ASI feed, the ASI switching matrix included in every R&S®DVM monitoring system is switched over automatically. This means that up to four transport streams fed in via separate cables can be sequentially monitored without any additional costs. The number of TS ASI inputs can be expanded as needed because the R&S®DVM scheduler suite can alternatively access external routers (FIG 6). Transitioning to a new signal takes just a few seconds. The software activates the appropriate monitoring configuration so that the relevant configuration is always active, even if the signal characteristics change.

Measurement results displayed graphically

Another useful function of the R&S®DVM scheduler suite is the graphical display of measurement results versus time. The application stores the monitoring results for each channel in a separate file for further analysis by other programs. For analysis purposes, the software collection contains the "graphical log viewer", which can display the performance of various channels and measurement value types simultaneously (FIG 7). All data can be checked simply and easily over a long time period.

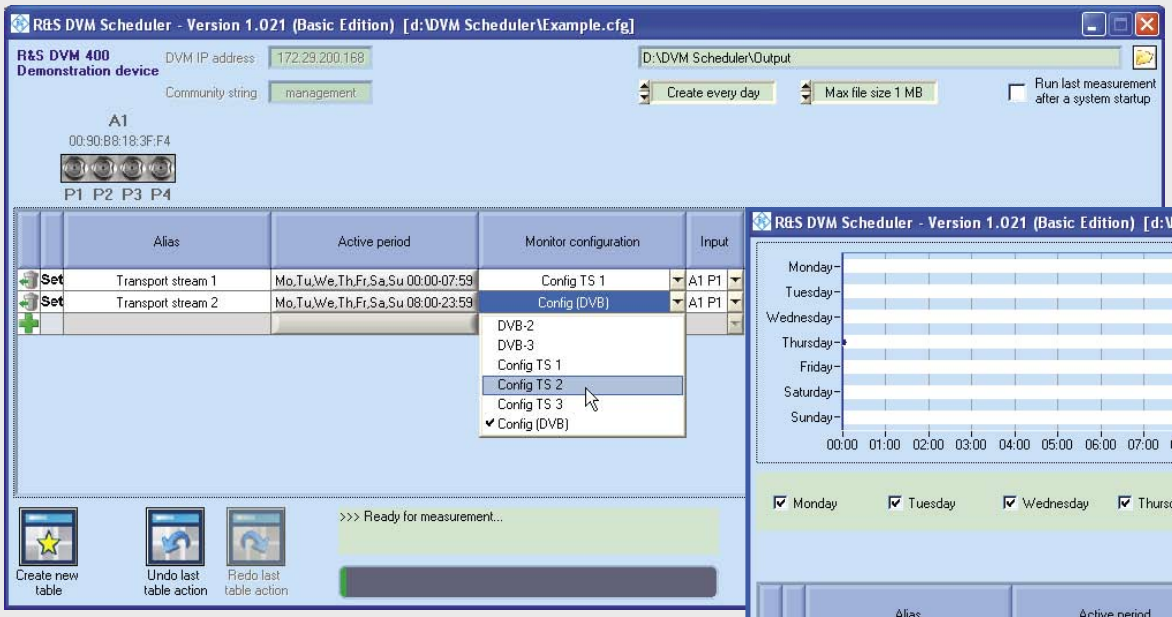

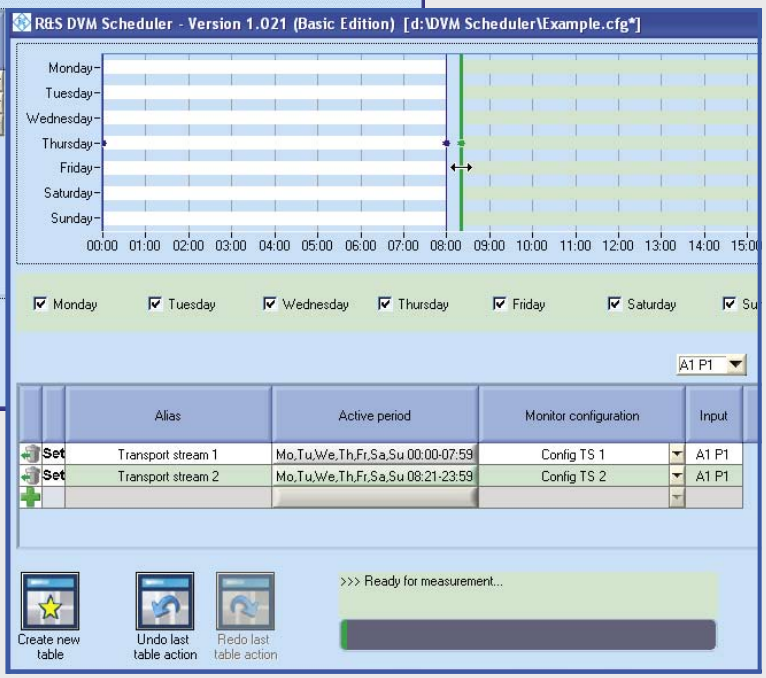

FIG 3 The first table line specifies that the first monitoring unit in the R&S®DVM monitoring system will use configuration "Config TS 1" between midnight and 8 a.m. – matching transport stream 1. Transport stream 2 is assigned "Config TS 2" for the remaining time.

FIG 4
The graphical user interface of the "active period editor" allows the rapid assignment and scheduling of all measurement steps. In this example, the monitoring start for transport stream 2 is shifted to 8 a.m. on all week days.

Usable for all models

The software controls the R&S®DVM monitoring system via its SNMP interface, which makes it usable for all models. The software can be installed onto devices that have already been supplied. PCs connected to a system via Ethernet are also suitable as a platform. This network connection additionally allows subsequent changes to the software configuration by remote control.

Summary

In combination with the easy-to-use R&S®DVM scheduler suite software collection, the R&S®DVM monitoring systems make monitoring of digital TV signals even more flexible. As a result, various monitoring configurations can be assigned automatically to the appropriate transmitted transport streams throughout the day. Because a single monitoring unit can be used for sequential analysis of various channels, overall costs are reduced. The recorded measurement values are quickly analyzed and easily evaluated by means of the "graphical log viewer".

Best of all: You can receive the software collection for free from your nearest Rohde & Schwarz representative.

Marius Erver

More information and data sheets at www.rohde-schwarz.com (search term: DVM)

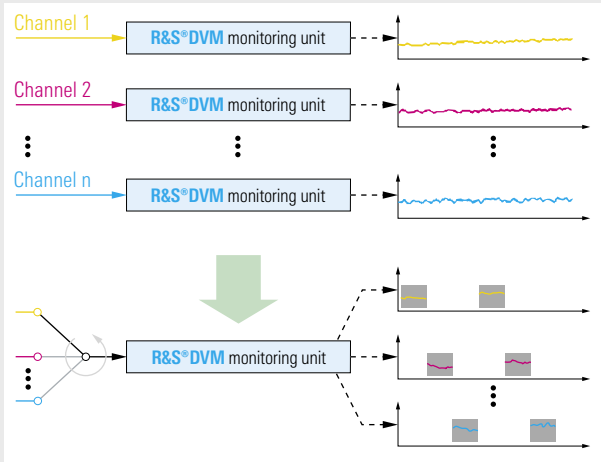

FIG 5
The R&S®DVM scheduler suite enables an individual R&S®DVM monitoring unit to check any number of channels in sequence.

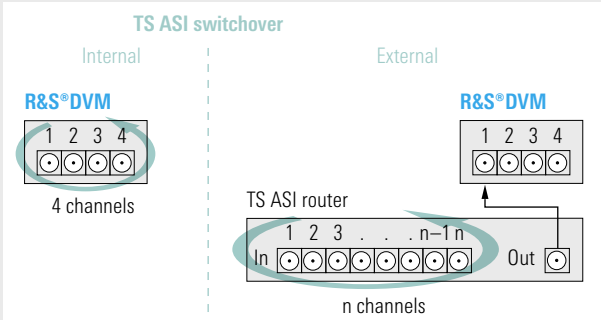

FIG 6
The internal ASI switching matrix of the R&S®DVM monitoring systems permits cyclic selection of the four TS ASI feeds. By using an external router, this number can be increased.

FIG 7 The "graphical log viewer" included in the suite uses an expanded plot function to provide a detailed comparison of report entries as well as receive measurement values for various channels.